First Article Inspection (FAI) and/or Source Inspection should be completed in accordance with the latest revision of the AS9102 Standard. If discrepancies between the AS9102 Standard, and the GDLS First Article Inspection (FAI) and Source Inspection Guidebook are found, the GDLS First Article Inspection (FAI) and Source Inspection Guidebook takes precedence.

1 APPLICATION

This document applies to assemblies, sub-assemblies, and detail parts that require First Article Inspection and/or Source Inspection. This includes any modified standard catalogue or Commercial-Off-the-Shelf (COTS) items.

2 REFERENCE DOCUMENTS AND STANDARDS

The following documents support the GDLS First Article Inspection (FAI) and/or Source Inspection process. The latest edition of each document, as well as any amendments, apply at the time of PO acceptance by the supplier.

•GDLS Part Approval Audit Record

•GDLS PQA-3000 Production Quality Assurance Handbook

•AS9102 Aerospace First Article Inspection Requirement

•AS9102 Numbered Explanation (Contains GDLS additional requirements)

•ASME Y14.43 Dimensioning and Tolerancing Principles for Gages and Fixtures

•GDLS Terms and Conditions - refer to www.gdls.com

2.1 HIERARCHY OF DOCUMENTATION

•The GDLS Purchase Order (PO) takes precedence over all documents. If there are any conflicts between the GDLS PO, and any other form of documentation, the GDLS PO takes precedence.

•If a conflict between any of the reference documents and this document occur, the requirements of this document will apply. Nothing in this document supersedes applicable laws and regulations unless a specific exemption has been obtained.

•If there is a conflict between any of the standards, documents, or quality clauses and the GDLS print, the GDLS print takes precedence.

3 ADDITONAL TERMS AND DEFINITIONS NOT DEFINED IN AS9102

Configuration Control- Frequently known as the “No Change” clause
•Configuration control is a contractual requirement. Please refer to the GDLS General Purchase Order Terms and Conditions located on the GDLS website (www.gdls.com) for the current revision, or contact your GDLS Buyer.

4 REQUIREMENTS

4.1 FIRST ARTICLE INSPECTION PLANNING

•Refer to the current revision of the AS9102 Standard for requirements.

4.2 PART REQUIREMENTS

•Refer to the current revision of the AS9102 Standard for requirements. The below content is in addition to the requirements of 4.2:

Vendor Item Control Drawings (VICD)

When purchasing or supplying VICD parts-either as **standalone** items shipped directly to GDLS or as parts **within an assembly** shipped to GDLS- suppliers are **strongly encouraged** to purchase from the suggested source(s) and to provide the part number(s) designated in the Technical Data Package (TDP)

Note: Suppliers shall perform verification of all products procured for, and provided to, GDLS. If a discrepancy is found between the suggested source part and the requirements of the GDLS TDP, the supplier shall immediately notify the GDLS Buyer and report the discrepancy. This requirement includes, but is not limited to, any supplier name or address changes when the supplier’s current name or address differs from the name shown on the GDLS TDP (e.g., due to acquisition, change of ownership, or location changes).
GDLS reserves the right to invoke a full FAI in place of the VICD FAI acceptance requirements at any time (e.g., due to part complexity, quality issues, corrective actions, or poor supplier performance).

A Standalone VICD items shipped directly to GDLS

A.1 Supplier is the suggested source and is supplying the part number designated in the Technical Data Package (TDP)

FAI and/or Source acceptance requires:

•Copy of the GDLS Part Approval Audit Record

•Copy of the GDLS Purchase Order

•Non-ballooned copy of the drawing (showing part/supplier requirements and notes to the inspector)

•Certificate of Conformance (CoC) traceable to the GDLS TDP

•*As applicable* : Copies of any Ordering Data (OD), Quality Assurance Provisions (QAP), or Quality Assurance Requirements (QAR), plus proof requirements are met

•*As applicable* : Proof that all GDLS TDP part marking, packaging, testing, etc. requirements are met

•*As applicable* : Please provide proof of any supplier name or address changes when the supplier's current name or address differs from the name shown on the GDLS drawing (e.g., due to acquisition, change of ownership, or location changes).

A.2 Supplier is NOT the suggested source, but provides the suggested source(s) and part number(s) designated in the Technical Data Package (TDP)

FAI and/or Source acceptance requires:

•Copy of the GDLS Part Approval Audit Record

•Copy of the GDLS Purchase Order

•Non-ballooned copy of the drawing (showing part/supplier requirements and notes to the inspector)

•CoC traceable to the GDLS TDP: From the manufacturer/OEM to the supplier (A Certificate of Conformance (CoC) will only be accepted from a distributor if it is issued by an authorized franchise distributor. Proof of authorization, as designated by the manufacturer of the part, must be attached to the CoC.)

•*As applicable* : Copies of any Ordering Data (OD), Quality Assurance Provisions (QAP), or Quality Assurance Requirements (QAR), plus proof requirements are met

•*As applicable* : Proof that all GDLS TDP part marking, packaging, testing, etc. requirements are met

•*As applicable* : Please provide proof of any supplier name or address changes when the supplier's current name or address differs from the name shown on the GDLS TDP (e.g., due to acquisition, change of ownership, or location changes).

A.3 Supplier does NOT procure the suggested source(s) and part number(s) designated in the Technical Data Package (TDP), OR chooses to manufacture the VICD item themselves

FAI and/or Source acceptance requires:

•Copy of the GDLS Part Approval Audit Record

•FULL AS9102 FAI package, including:

♦Full ballooning of all TDP requirements
♦Verification that all TDP requirements are met
♦All required environmental, qualification, and/or performance testing
♦GDLS required Parts marking verification

B VICD parts used in assemblies shipped to GDLS

B.1 Supplier procures from the suggested source(s) and is supplying the part number(s) designated in the Technical Data Package (TDP)

FAI and/or Source acceptance requires:

•Non-ballooned copy of the drawing (showing part/supplier requirements and notes to the inspector), attached to the OEM CoC for the material procured

•CoC traceable to the GDLS TDP from the manufacturer/OEM to the supplier

•*As applicable* : Copies of any Ordering Data (OD), Quality Assurance Provisions (QAP), or Quality Assurance Requirements (QAR), plus proof requirements are met

•*As applicable* : Proof that all GDLS TDP part marking, packaging, testing, etc. requirements are met

•*As applicable* : Please provide proof of any supplier name or address changes when the supplier's current name or address differs from the name shown on the GDLS drawing (e.g., due to acquisition, change of ownership, or location changes).

B.2 Supplier does NOT procure the suggested source(s) and part number(s) designated in the Technical Data Package (TDP), OR chooses to manufacture the VICD item themselves

FAI and/or Source acceptance requires:
•FULL AS9102 FAI package, including:
♦Full ballooning of all TDP requirements
♦Verification that all TDP requirements are met
♦All required environmental, qualification, and/or performance testing
♦GDLS required Parts marking verification

Source Control Drawings (SCD)

When purchasing or supplying SCD parts-either as **standalone items** shipped directly to GDLS or as **parts within an assembly** shipped to GDLS- the supplier is **REQUIRED** to purchase from the approved source of supply and to provide the approved part number designated in the Technical Data Package (TDP)

Note: Suppliers shall perform verification of all products procured for, and provided to, GDLS. If a discrepancy is found between the approved source part and the requirements of the GDLS TDP, the supplier shall immediately notify the GDLS Buyer and report the discrepancy. This requirement includes, but is not limited to, any supplier name or address changes when the supplier's current name or address differs from the name shown on the GDLS TDP (e.g., due to acquisition, change of ownership, or location changes).
GDLS reserves the right to invoke a full FAI in place of the SCD FAI acceptance requirements at any time (e.g., due to part complexity, quality issues, corrective actions, or poor supplier performance).

A Standalone SCD items shipped directly to GDLS

A.1 Supplier is the approved source of supply and is providing the approved part number designated in the Technical Data Package (TDP)

FAI and/or Source acceptance requires:
•Copy of the GDLS Part Approval Audit Record
•Copy of the GDLS Purchase Order
•Non-ballooned copy of the drawing (showing part/supplier requirements and notes to the inspector)
•Certificate of Conformance (CoC) traceable to the GDLS TDP
•*As applicable* : Copies of any Ordering Data (OD), Quality Assurance Provisions (QAP), or Quality Assurance Requirements (QAR), plus proof requirements are met
•*As applicable* : Proof that all GDLS TDP part marking, packaging, testing, etc. requirements are met
•*As applicable* : Please provide proof of any supplier name or address changes when the supplier's current name or address differs from the name shown on the GDLS drawing (e.g., due to acquisition, change of ownership, or location changes).

A.2 Supplier is NOT the approved source of supply but is providing the approved source(s) and part number(s) designated in the Technical Data Package (TDP)

FAI and/or Source acceptance requires:
•Copy of the GDLS Part Approval Audit Record
•Copy of the GDLS Purchase Order
•Non-ballooned copy of the drawing (showing part/supplier requirements and notes to the inspector)
•CoC traceable to the GDLS TDP from the manufacturer/OEM to the supplier (A Certificate of Conformance (CoC) will only be accepted from a distributor if it is issued by an authorized franchise distributor. Proof of authorization, as designated by the manufacturer of the part, must be attached to the CoC.)
•*As applicable* : Copies of any OD, QAP, or QAR, plus proof requirements are met

•*As applicable* : Proof that all GDLS TDP part marking, packaging, testing, etc. requirements are met

•*As applicable* : Please provide proof of any supplier name or address changes when the supplier's current name or address differs from the name shown on the GDLS drawing (e.g., due to acquisition, change of ownership, or location changes).

B SCD parts used in assemblies shipped to GDLS

B.1 Supplier is the approved source and is providing the approved part number designated in the Technical Data Package (TDP), OR the supplier procures from the required source(s) and is providing the approved part number designated in the Technical Data Package (TDP)

FAI and/or Source acceptance requires:

•Non-ballooned copy of the drawing (showing part/supplier requirements and notes to the inspector) Attached to the applicable COC in the assembly

•CoC traceable to the GDLS TDP from the manufacturer/OEM
(A Certificate of Conformance (CoC) will only be accepted from a distributor if it is issued by an authorized franchise distributor. Proof of authorization, as designated by the manufacturer of the part, must be attached to the CoC.)

•*As applicable* : Copies of any OD, QAP, or QAR, plus proof requirements are met

•*As applicable* : Proof that all GDLS TDP part marking, packaging, testing, etc. requirements are met

•*As applicable* : Please provide proof of any supplier name or address changes when the supplier's current name or address differs from the name shown on the GDLS drawing (e.g., due to acquisition, change of ownership, or location changes).

4.3 DIGITAL PRODUCT DEFINITION REQUIREMENTS

•Refer to the current revision of the AS9102 Standard for requirements

4.4 EVALUATION ACTIVITIES

•Refer to the current revision of the AS9102 Standard for requirements. The below content is in addition to the requirements of 4.4:

• AS9102 Numbered Explanation- GDLS additional requirements
•Part specific gages should be built in accordance with ASME Y14.43 Dimensioning and Tolerancing Principles for Gages and Fixtures.

4.5 NONCONFORMANCE HANDLING

•Refer to the current revision of the AS9102 Standard for requirements. The below content is in addition to the requirements of 4.5:
•All parts within a lot in which at least one nonconformance has been found must be quarantined and prevented from shipping until First Article Inspection (FAI) or Source Inspection approval is obtained. The entire lot must undergo 100% inspection for the identified nonconformance(s). Furthermore, 100% inspection of all parts will be required for all subsequent manufacturing runs of that part number until the root cause of the nonconformance has been identified, a permanent corrective action has been implemented, and that corrective action has been verified as producing conforming product.

•When processing an inspection package with documented nonconformance's in addition to 4.5.a:
•The supplier must notify the appropriate GDLS Buyer and the Supplier Quality Assurance (SQA) Regional Manager when an FAI or Source Inspection fails. All nonconforming items must be dispositioned and corrected before shipment. Parts may not be shipped until the FAI or Source Inspection is approved. FAI and Source Inspection approval is documented by the GDLS representative signing and stamping both the GDLS Part Approval Audit Record and AS9102 Form 1.

Note: If the nonconformance results in an approved GDLS deviation and that deviation is listed on the purchase order (PO), the FAIR may be accepted. However, on AS9102 Form 1, Field 19 (“Does the FAIR contain a documented nonconformance(s)?”), you must select YES, and on AS9102 Form 3, Field 11 (“Nonconformance Number”), you must enter the deviation number that is traceable to the affected characteristic number(s). The supplier is then required to complete a DELTA FAI on the next manufacturing lot of conforming parts to certify compliance to the Technical Data Package (TDP).
Additionally, if there is an approved deviation and that deviation is listed on the purchase order (PO), a copy of the approved deviation must ship with the packing slip/shipping paperwork. If Quality Clause QP93 is listed on the purchase order (PO), the packing slip must identify the waiver/deviation number.

4.6 PARTIAL OR RE-ACCOMPLISHMENT OF FIRST ARTICLE INSPECTION

•Refer to the current revision of the AS9102 Standard for requirements. The below content is in addition to the requirements of 4.6:

• AS9102 4.6.c: GDLS reserves the right to invoke a full FAI in place of a partial FAI at any time (e.g., due to part complexity, quality issues, corrective actions, or poor supplier performance).

4.7 DOCUMENTATION

4.7.1 DOCUMENTATION FORMS

•Refer to the current revision of the AS9102 Standard for requirements. The below content is in addition to the requirements of 4.7.1:
•GDLS Part Approval Audit Record – The supplier shall complete all applicable fields on this record and ensure it is available when the GDLS representative reviews the FAIR or Source Inspection Package. The GDLS representative will review the inspection package and record the approval or rejection on this form. After the inspection review is complete, the GDLS representative shall submit the completed GDLS Part Approval Audit Record to GDLS.

•For (CR) Conditionally Required and (O) Optional fields, blanks spaces are not allowed. If the field is not applicable, then field shall be noted as N/A.

•AS9102 Numbered Explanation- GDLS additional requirements

4.7.2 CHARACTERISTIC ACCOUNTABILITY

•Refer to the current revision of the AS9102 Standard for requirements. The below content is in addition to the requirements of 4.7.2 a

The First Article Inspection Report (FAIR) and Source Inspection Report shall provide objective evidence of compliance to all applicable requirements, including, but not limited to, drawing and/or digital product definition (DPD) requirements, as well as Order Data (OD), Quality Assurance Requirements (QAR), and Quality Assurance Provisions (QAP) defined on the PO. All drawing and/or DPD characteristics, including, but not limited to, OD, QAR, and QAP requirements, shall be ballooned and documented on AS9102 Form 3.

4.7.3 RECORDING RESULTS

•Refer to the current revision of the AS9102 Standard for requirements

4.8 RETAINED DOCUMENTED INFORMATION

•Refer to the current revision of the AS9102 Standard for requirements

FAI and Source Inspection Submission Format Requirements

For assembly inspections that include detail/lower-level components, the entire package must be submitted with all levels of the inspection package organized in a single, cohesive pack, separated by each detail level. It is important to ensure that pages are not sent at random, but rather in an orderly and structured manner to maintain clarity and coherence throughout the submission.

FAI / Source Inspection Examples are attached for reference

AS9102 Example of a Continuous Drawing

GDLS Part Approval Audit Record

The AS9102 FAIR including all technical data and supporting data, and this GDLS Audit Record shall be kept on file at the suppliers location and made available to GDLS upon request. The GDLS Auditor will only be required to take a copy of this Audit Record after completion and return to GDLS.
GDLS Trusted Vendor Program Suppliers: Please fill out all applicable fields aside from fields # 15 thru # 20 below, these fields are not required for the Trusted Vendor Program.

Company Name:	Jos Fab Lab	**AUDIT TYPE & SEQUENCE #:**	VFP 000000

1. Purchase Order Number(s) and Revision(s)	**2. Part Number**	**3. Drawing Revision**	**4. Additional Requirements: (NCH, RFV, OD, QAP, QAR etc.)**
3335554444 REV 03	LS1151268	A	N/A

5. Quality Clauses:	**6. Approval Letters (e.g. Weld, software, braze, A514, etc. List Approval number and Date)**
QY11, QJ21, QX118, QL46	QX118- Approval Date 10/25/2025

7. Type of FAI	**8. Full or Partial**	**9. Lot Size AND Qty Inspected**	**10. AQL Sampling Data on File**	**11. Audit Results** (To be completed by the GDLS Auditor)
☐ Detail ☑ Assembly	☑ Full ☐ Partial	25/5	☑ Yes ☐ No	☑ Pass ☐ Fail

12. Comments:	Verified Weld Approval is current and CARC form comply

1. Purchase Order Number(s) and Revision(s)	**2. Part Number**	**3. Drawing Revision**	**4. Additional Requirements: (NCH, RFV, OD, QAP, QAR etc.)**

5. Quality Clauses:	**6. Approval Letters (e.g. Weld, software, braze, A514, etc. List Approval number and Date)**

7. Type of FAI	**8. Full or Partial**	**9. Lot Size AND Qty Inspected**	**10. AQL Sampling Data on File**	**11. Audit Results** (To be completed by the GDLS Auditor)
☐ Detail ☐ Assembly	☐ Full ☐ Partial	/	☐ Yes ☐ No	☐ Pass ☐ Fail

12. Comments:	

13. Supplier Approver/Delegate Printed Name, Signature & Date		**14. Supplier Delegate Stamp**	**15. GDLS Auditor Printed Name, Signature & Date**		**16. GDLS Auditor Stamp**
Printed Name: Jo Fabman	Date: 08/13/26	{Delegation Stamp Here}	Printed Name: Deanna Totten	Date: 08/13/26	017
Signature: Jo Fabman			Signature: Deanna Totten		

17. DATE(S): (To be completed by GDLS FSR)	08/13/26						**Other Expenses: e.g. Tolls, Flights, Hotel, Meals** ***(Flights, Hotel, Meals Must be pre-approved)***
18. Mileage: (To be completed by GDLS FSR)	12						
19. Travel Time: (To be completed by GDLS FSR)	.25						
20. On Site Time: (To be completed by GDLS FSR)	1						

B.1 FORM 1 - PART NUMBER ACCOUNTABILITY

1. Part Number:	2. Part Name:	3. Serial Number:	4. FAIR Identifier:
LS1151268	GRAB HANDLE	N/A	VFP 000000
5. Part Revision Level:	**6. Drawing Number:**	**7. Drawing Revision Level:**	**8. Additional Changes:**
A	LS1151268	A	N/A
9. Manufacturing Process Reference:	**10. Organization Name:**	**11. Supplier Code:**	**12: Purchase Order Number:**
WO 124588	JOs FAB LAB	1202555 / XXXXX	3335554444 REV 03

13. Detail: ☐

Assembly: ☒

14. Full FAI: ☒ **Partial FAI:** ☐

Baseline Part Number (including revision level): LS1151268

Reason for Full / Partial FAI: FIRST TIME MANUFACTURING

a) If the part number above is a detail part only, go to field 19.
b) If the part number above is an assembly, go to the "INDEX" section below.

INDEX of part numbers or sub-assembly numbers required to make the assembly noted above.

15. Part Number:	16. Part Name:	17. Part Type:	18. FAIR Identifier:
LS1151268-1	TUBE	Detail	VFP 000000
LS1151268-2	PLATE	Detail	VFP 000000

19. Does FAIR Contain a Documented Nonconformance(s)? **Yes** ☐ **No** ☒

20. FAIR Verified By: Sam Smith *Sam Smith* **{Delegation stamp here as applicable}** | **21. Date:** 08/13/2026

22. FAIR Reviewed/Approved By: Jo Fabman *Jo Fabman* **{Delegation stamp here as applicable}** | **23. Date:** 08/13/2026

24. Customer Approval: Deanna Totten | ***25. Date:*** 08/13/2026

26. Comments:
QY11, QJ21, QX118, QL46
QX118- Approval Date 10/25/2025

B.3 FORM 2 - PRODUCT ACCOUNTABILITY - MATERIALS, SPECIAL PROCESSES, AND FUNCTIONAL TESTING

1. Part Number: LS1151268	**2. Part Name:** GRAB HANDLE		***3. Serial Number:*** N/A		**4. FAIR Identifier** VFP 000000
5. Material or Process Name:	***6. Specification Number:***	**7. Code:**	***8. Supplier:***	***9: Customer Approval Verification:***	***10. Certificate of Conformance Number:***
Weld	AWS D1.2	N/A	JOs FAB LAB	Weld Letter Provided	WO 124588
MATERIAL: Tubing Aluminum Alloy 6061-T6 or 6061-T6511 25.4mm OD x 2.18mm or 1.0 OD x .12" Wall (USED TO MAKE FN 1)	ASTM B210 or ASTM B221	N/A	Tom's Aluminum	N/A	TA4651-025 June 24, 2018 - Heat/Lot 354-62418
MATERIAL: Aluminum Alloy 6061-T651 or T6511 7.94mm or 1.312 Inch Thick (USED TO MAKE FN 2)	ASTM B209 or ASTM B221	N/A	Tom's Aluminum	N/A	TA4660-056 Feb 23, 2019 - Heat/Lot 365-22319
PROTECTIVE FINISH: MIL-DTL-5541 TYPE II, CLASS 1A	MIL-DTL-5541	N/A	Military Painting Inc.	N/A	MPI65254-089 Nov 01,2019 Batch 2548-54 EXP 06/12/26
PAINT: 19207-12344343, WHITE, COLOR NO 17625 OF FED-STD-595	19207-12344343 / FED-STD-595	N/A	Military Painting Inc.	N/A	MPI65254-089 Nov 01,2019 Batch 2548-54 EXP 08/26/26
ITEM IDENTIFICATION: BLACK EPOXY INK A-A-56032	MIL-STD-130 / A-A-56032	N/A	Part Marking Specialists Inc.	N/A	PMS456123-466 Oct 15, 2019 Lot 64510 EXP 02/15/26
64 DP DIAMOND KNURLING CLASS 1	ASME B94.6	N/A	Knurl Warehouse	KW65425-411	Sept 19, 2019 Lot 586486

11. Functional Test Procedure Number:	***12. Acceptance Report Number:***
N/A	N/A

13. Comments:
N/A

B.5 FORM 3 - CHARACTERISTIC ACCOUNTABILITY, VERIFICATION, AND COMPATIBILITY EVALUATION

1. Part Number:	2. Part Name:	3. Serial Number:	4. FAIR Identifier:
LS1151268	GRAB HANDLE	N/A	VFP 000000

Characteristic Accountability					Inspection/Test Results		
5. Char. No.:	**6. Reference Location:**	**7. Characteristic Designator:**	**8. Requirement:**	**9. Results:**	**10: Designed/ Qualified Tooling:**	**11. Nonconformance Number:**	**12. Additional Data/Comments:**
1	S1 /D8	Minor	Note: 1. DIMENSIONING AND TOLERANCING IN ACCORDANCE WITH ASME Y14.8M-1994.	Pass	N/A	N/A	N/A
2	S1 /D8	Minor	Note: 2. ASTM SI 10 APPLIES. ANNEX B SHALL BE USED IN CONVERTING AND ROUNDING OFF. 1 INCH = 25.4 mm APPLIES.	Pass	N/A	N/A	N/A
3	S1 /D8	Minor	Note: 3, UNLESS OTHERWISE SPECIFIED: TOLERANCE ON IMPLIED 90 DEGREE ANGELS TO BE +/- 2 DEGREES.	Pass	N/A	N/A	N/A
4	S1 /D8	Minor	Note: 4. MATERIAL SHALL BE FREE OF OIL, MACHINING FLUIDS, GREASE, OR OTHER CONTAMINANTS THAT MAY HAVE AN ADVERSE AFFECT ON WELDING.	Pass	N/A	N/A	N/A
5	S1 /D8	Minor	Note: 5. REMOVE ALL BURRS AND SHARP EDGES.	Pass	N/A	N/A	N/A
6	S1 / C8	Minor	Note: 6. UNLESS OTHERWISE SPECIFIED ALL WELDING TO BE PER AWS D1.2.	Pass	N/A	N/A	Certified welders used / verified
7	S1 / C8	Minor	Note: 7. MATERIAL:	Pass	N/A	N/A	C of C from material manufacturer

7.1	S1 / C8	Minor	Note: 7.1 TUBING, ALUMINUM ALLOY 6061-T6 0R 6061-T6511, SPEC, ASTM B210 OR ASTM B221. DIA 25.4mm O.D. X 3.18mm WALL THICKENSS (1.0 dia x .12 inch) WALL THICKNESS	1.0 dia x .12 inch	CALIPERS ID X12S456 CAL DUE 11/10/26	N/A	C of C from material manufacturer
7.1.1	S1 / D3	Minor	Note: (7.1) LOCATION FN 1	Pass	N/A	N/A	N/A
7.2	S1 / C8	Minor	Note: 7.2 ALUMINUM ALLOY, 6061-T651 OR T6511, ASTM B209 OR ASTM B221, 7.94mm (.312 INCH) THICK.	.312 INCH	CALIPERS ID X12S456 CAL DUE 11/10/26	N/A	C of C from material manufacturer
7.2.1	S1 / D3	Minor	Note: (7.2) LOCATION FN 2	Pass	N/A	N/A	N/A
8	S1 / C8	Minor	Note: 8. PROTECTIVE FINISH: FINISH PER MIL-DTL-5541 TYPE II, CLASS 1A. PAINT PER REQUIREMNTS ON DRAWING NO. 19207-12344343, WHITE, COLOR NO. 17925 OF FED-STD-595.	Pass	N/A	N/A	C of C from special process supplier Form 4707 completed / reviewed
9	S1 / C8	Minor	Note: 9. ALL HOLES TO BE FREE OF PAINT.	Pass	N/A	N/A	N/A
10	S1 / B8	Minor	Note: 10. ITEM IDENTIFICATION: RUBBER STAMP OR STENCIL THE FOLLOWING MARKINGS IN ACCORDANCE WITH MIL-STD-130 USING BACK EPOXY INK PER A-A-56032, IN 4-7 mm HIGH CHARACTERS, 01417-LS1151268 MFR- MANFACTLRER'S CAGE CODE	6mm	CALIPERS ID X12S456 CAL DUE 11/10/26	N/A	01417-LS1151268 MFR XXXXX
10.1	S1 / B5	Minor	Note: NOTE 10 LOCATION	Pass	N/A	N/A	N/A
11	S1 / B8	Minor	Note: 11. 64DP-DIAMOND KNURLING CLASS 1 PER ASME B94.8- 1994.	Pass	N/A	N/A	N/A
11.1	S2 / A5	Minor	Note: NOTE 11 LOCATION	Pass	N/A	N/A	N/A

12	S1 / D6	Minor	Linear Dimension: 4.4 +/-1.5 mm	4.50	CALIPERS ID X12S456 CAL DUE 11/10/26	N/A	N/A
13	S1 / D4	Minor	Profile of a Surface: 0 - 1.5 mm 2 SURFACES	1.00- 1.02	CMM ID X1245588 CAL DUE 12/01/26	N/A	N/A
14	S1 / D3	Minor	Linear Dimension: 6.3 +/-1.5 mm	6.25	CALIPERS ID X12S456 CAL DUE 11/10/26	N/A	N/A
15	S1 / C3	Minor	Weld Size: = 3 mm 2 PLACES	3	Fillet Gauge FG5642 CAL DUE 02/14/26	N/A	N/A
16	S1 / B3	Minor	Linear Dimension: 27.3 +/-1.5 mm 2 PLACES	27.40-27.80	CALIPERS ID X12S456 CAL DUE 11/10/26	N/A	N/A
17	S1 / B3	Minor	Diameter: 9 +.2 -.1 mm 4 PLACES	9.0-9.15	CALIPERS ID X12S456 CAL DUE 11/10/26	N/A	N/A
18	S1 / B3	Minor	True Position: 0 - 3 mm 4 places	2.0-2.5	CMM ID X1245588 CAL DUE 12/01/26	N/A	N/A
19	S1 / B3	Minor	True Position: 0 - .7 mm 4 places	.50-60	CMM ID X1245588 CAL DUE 12/01/26	N/A	N/A
20	S2 / C6	Minor	Linear Dimension: 446.9 +/-3 mm	448.2	CMM ID X1245588 CAL DUE 12/01/26	N/A	N/A

21	S2 / B7	Minor	Radius: 37.3 +/-1.5 mm	37.5	RADIUS GAGE ID X1245866 CAL DUE 10/31/26	N/A	N/A
22	S2 / B5	Minor	Linear Dimension: 54.7 +/- 2 mm 2 PLACES	54.7-54.9	CALIPERS ID X12S456 CAL DUE 11/10/26	N/A	N/A
23	S2 / B4	Minor	Linear Dimension: 75 +/-5 mm 2 PLACES	74.2-75.1	CALIPERS ID X12S456 CAL DUE 11/10/26	N/A	N/A
24	S2 / C3	Minor	Profile of a Surface: 0 - 1.5 mm	1.0	CMM ID X1245588 CAL DUE 12/01/26	N/A	N/A

REVISION HISTORY					
ZONE	REV	DESCRIPTION	DATE (YR-MO-DA)	APPROVED	
	-	PRODUCT BASELINE	10-09-22	JK	RZ
	A	REVISED PER 11-04-01	11-06-14	ZH	MJB

PARTS LIST

FIND NO	QTY	CAGE CODE	PART NUMBER	DESCRIPTION	SPECIFICATIONS	NOTES
1	1	01417	LS1151269-1	TUBE		7.1 (7.1.1)
2	2	01417	LS1151269-2	PLATE		7.2 (7.2.1)

NOTES:

1. DIMENSIONING AND TOLERANCING IN ACCORDANCE WITH ASME Y14.5M-1994.
2. ASTM SI 10 APPLIES. ANNEX B SHALL BE USED IN CONVERTING AND ROUNDING OFF 1 INCH = 25.4 mm APPLIES.
3. UNLESS OTHERWISE SPECIFIED: TOLERANCE ON IMPLIED 90 DEGREE ANGLES TO BE ±2 DEGREES.
4. MATERIAL SHALL BE FREE OF OIL, MACHINING FLUIDS, GREASE, OR OTHER CONTAMINANTS THAT MAY HAVE AN ADVERSE AFFECT ON WELDING.
5. REMOVE ALL BURRS AND SHARP EDGES.
6. UNLESS OTHERWISE SPECIFIED ALL WELDING TO BE PER AWS D1.2
7. MATERIAL:
   - 7.1 TUBING, ALUMINUM ALLOY 6061-T6 OR 6061-T6511, SPEC. ASTM B210 OR ASTM B221. Ø 25.4mm O.D. X 3.18mm WALL THICKNESS (1.0 DIA. X .12 INCH) WALL THICKNESS
   - 7.2 ALUMINUM ALLOY, 6061-T651 OR T6511, ASTM B209 OR ASTM B221. 7.94 mm (.312 INCH) THICK.
8. PROTECTIVE FINISH: FINISH PER MIL-DTL-5541 TYPE II, CLASS 1A. PAINT PER REQUIREMNTS ON DRAWING NO. 19207-12344343, WHITE, COLOR NO. 17925 OF FED-STD-595.
9. ALL HOLES TO BE FREE OF PAINT.
10. ITEM IDENTIFICATION: RUBBER STAMP OR STENCIL THE FOLLOWING MARKINGS IN ACCORDANCE WITH MIL-STD-130 USING BLACK EPOXY INK PER A-A-56032, IN 4-7 mm HIGH CHARACTERS. 01417-LS1151268 MFR-⊏⊐ MANUFACTURER'S CAGE CODE
11. 64DP-DIAMOND KNURLING CLASS I PER ASME B94.8-1994

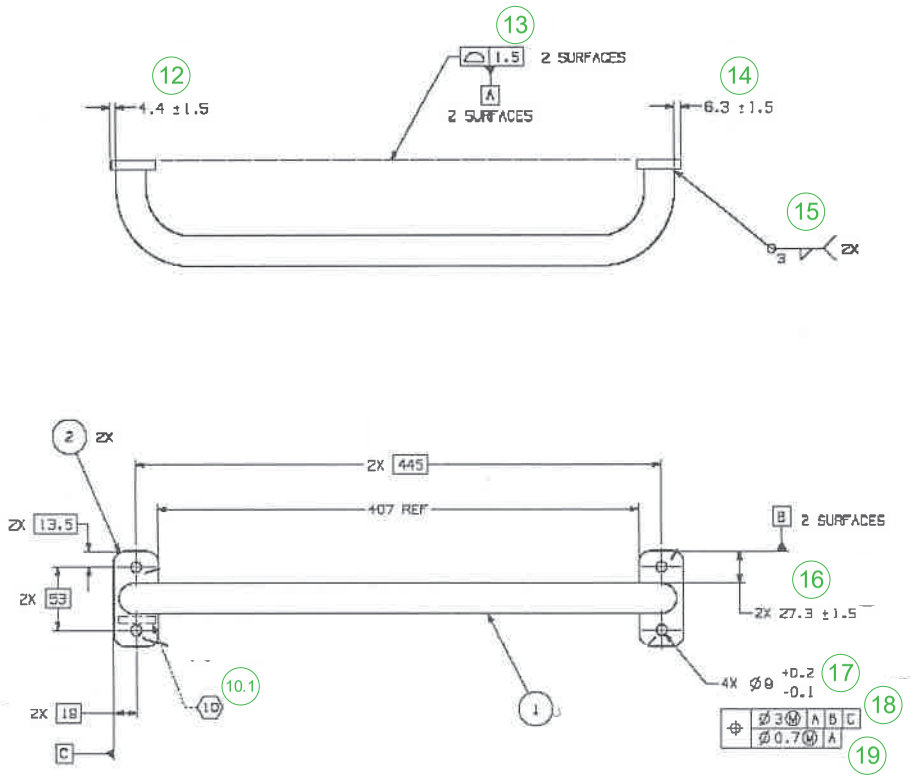

METRIC

THIRD ANGLE PROJECTION

PWIC A

NEXT ASSY | USED ON

APPLICATION

UNLESS OTHERWISE SPECIFIED DIMENSIONS ARE IN MILLIMETERS

TOLERANCES ON

1 PLACE ±--- 2 PLACE ±---- ANGLES ±-°

LOG BASIS

DATE BASIS

DRAWING APPROVAL -

DESIGN APPROVAL -

PART NO LS1151268

GENERAL DYNAMICS
Land Systems

TITLE GRAB HANDLE

SIZE	CAGE CODE	DWG NO	REV
D	01417	LS1151268	A

SCALE 1:2 SHEET 1 OF 2

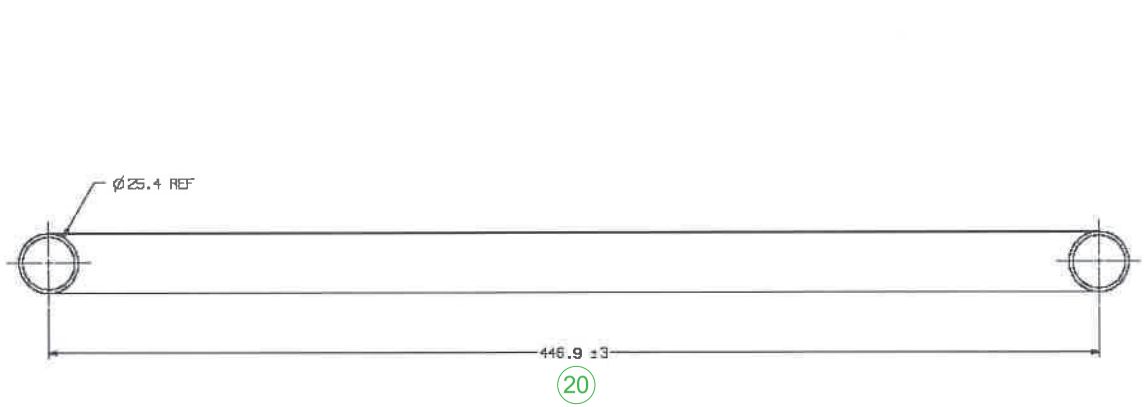

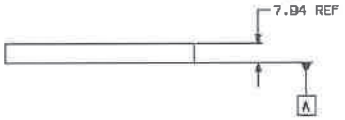

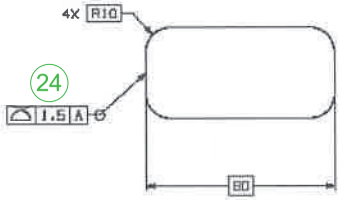

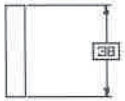

PLATE (2) REF
SCALE 1:1

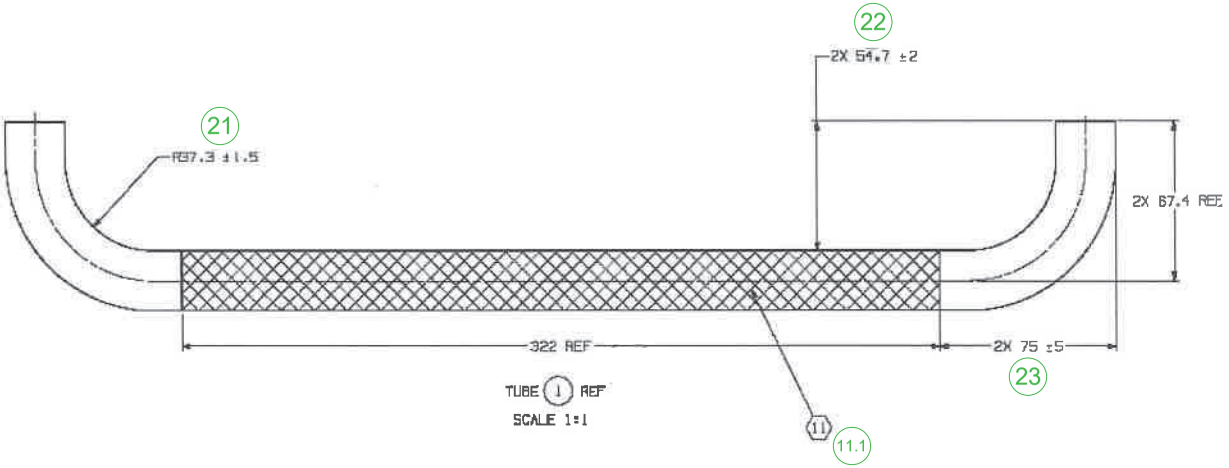

TUBE (1) REF
SCALE 1:1

SIZE	CAGE CODE	DWG NO	REV
D	01417	LS1151268	A
SCALE 1:1		SHEET 2 OF 2	

AS9102 Example of an Assembly Drawing containing Detail and COTs parts

GDLS Part Approval Audit Record

The AS9102 FAIR including all technical data and supporting data, and this GDLS Audit Record shall be kept on file at the suppliers location and made available to GDLS upon request. The GDLS Auditor will only be required to take a copy of this Audit Record after completion and return to GDLS.
GDLS Trusted Vendor Program Suppliers: Please fill out all applicable fields aside from fields # 15 thru # 20 below, these fields are not required for the Trusted Vendor Program.

Company Name:	Jos Fab Lab	**AUDIT TYPE & SEQUENCE #:**	VFP 000000

1. Purchase Order Number(s) and Revision(s)	**2. Part Number**	**3. Drawing Revision**	**4. Additional Requirements: (NCH, RFV, OD, QAP, QAR etc.)**
3335554441 REV 03	LS1151268-011	-	N/A

5. Quality Clauses:	**6. Approval Letters (e.g. Weld, software, braze, A514, etc. List Approval number and Date)**
QY11, QJ21, QX118, QL46	QX118- Approval Date 10/25/2025

7. Type of FAI	**8. Full or Partial**	**9. Lot Size AND Qty Inspected**	**10. AQL Sampling Data on File**	**11. Audit Results** (To be completed by the GDLS Auditor)
☐ Detail ☑ Assembly	☑ Full ☐ Partial	25/5	☑ Yes ☐ No	☑ Pass ☐ Fail

12. Comments:	Verified Weld and CARC compliance

1. Purchase Order Number(s) and Revision(s)	**2. Part Number**	**3. Drawing Revision**	**4. Additional Requirements: (NCH, RFV, OD, QAP, QAR etc.)**

5. Quality Clauses:	**6. Approval Letters (e.g. Weld, software, braze, A514, etc. List Approval number and Date)**

7. Type of FAI	**8. Full or Partial**	**9. Lot Size AND Qty Inspected**	**10. AQL Sampling Data on File**	**11. Audit Results** (To be completed by the GDLS Auditor)
☐ Detail ☐ Assembly	☐ Full ☐ Partial	/	☐ Yes ☐ No	☐ Pass ☐ Fail

12. Comments:	

13. Supplier Approver/Delegate Printed Name, Signature & Date		**14. Supplier Delegate Stamp**	**15. GDLS Auditor Printed Name, Signature & Date**		**16. GDLS Auditor Stamp**
Printed Name: Jo Fabman	Date: 08/14/26	{Delegation stamp here}	Printed Name: Deanna Totten	Date: 08/14/26	017
Signature: Jo Fabman			Signature: Deanna Totten		

17. DATE(S): (To be completed by GDLS FSR)	08/14/2026						**Other Expenses: e.g. Tolls, Flights, Hotel, Meals** ***(Flights, Hotel, Meals Must be pre-approved)***
18. Mileage: (To be completed by GDLS FSR)	12						
19. Travel Time: (To be completed by GDLS FSR)	.25						N/A
20. On Site Time: (To be completed by GDLS FSR)	2						

AS9102C

B.1 Form 1 - Part Number Accountability

1. Part Number:	2. Part Name:	3. Serial Number:	4. FAIR Identifier:
LS1151268-011	GRAB HANDLE	N/A	VFP 000000
5. Part Revision Level:	***6. Drawing Number:***	***7. Drawing Revision Level:***	***8. Additional Changes:***
-	LS1151268	-	N/A
9. Manufacturing Process Reference:	**10. Organization Name:**	11. Supplier Code:	12. Purchase Order No.:
WO 26549	JOs FAB LAB	1202555 / XXXXX	3335554441 REV 03
13. Detail Part FAI: ☐	**14. Full FAI:** ☑ **Partial FAI:** ☐		
	Baseline Part Number (including revision level):	LS1151268-011 REV -	
Assembly FAI : ☑	**Reason for Full/Partial FAI:**	FIRST TIME MANUFACTURING	

a) If above part number is a detail part only, go to Field 19.
b) If above part number is an assembly, go to the "INDEX" section below.

INDEX of part numbers or sub-assembly numbers required to make the assembly noted above.

15. Part Number:	*16. Part Name:*	*17. Part Type:*	*18. FAIR Identifier:*
LS2222	TUBE	DETAIL	VFP 000000
LS2223	PLATE	DETAIL	VFP 000000
X2Y-14-002	ANTI-SLIP TAPE	COTS	COTS PACK/COC #124596
2Y4X69Z	FASTNER KIT	COTS	COTS PACK/COC #124597

19. Does FAIR Contain a Documented Nonconformance(s)? YES ☐ **NO** ☑

20.FAIR Verified By:	Sam Smith	{INSERT STAMP HERE IF APPLICABLE}	**21. Date:**	08/14/2026
22.FAIR Reviewed By:	Jo Fabman	{INSERT STAMP HERE IF APPLICABLE}	**23. Date:**	08/14/2026
24.Customer Approval:	Deanna Totten	017	***25. Date:***	08/14/2026

26. Comments: QY11, QJ21, QX118, QL46

QX118- Approval Date 10/25/2025

B.3 FORM 2 - PRODUCT ACCOUNTABILITY - MATERIALS, SPECIAL PROCESSES, AND FUNCTIONAL TESTING

1. Part Number:	2. Part Name:	3. Serial Number:	4. FAI Identifier:
LS1151268-011	GRAB HANDLE	N/A	VFP 000000

5. Material or Process Name	6. Specification Number	7. Code	8. Supplier	9. Customer Approval Verification	10. Certificate of Conformance Number
WELD	AWS D1.2	N/A	JOs FAB LAB	WELD LETTER PROVIDED	WO 26549
PROTECTIVE FINISH MIL-DTL-5541 TYPE II, CLASS 1A	MIL-DTL-5541	N/A	Military Painting Inc.	N/A	MPI65254-089 Nov 01,2019 Batch 2548-54 EXP 06/12/26
PAINT 19207-12344343, WHITE, COLOR NO 17625 OF FED-STD-595	19207-12344343 / FED-STD-595	N/A	Military Painting Inc.	N/A	MPI65254-089 Nov 01,2019 Batch 2548-54 EXP 08/26/26
ITEM IDENTIFICATION, BLACK EPOXY INK A-A-56032	MIL-STD-130 / A-A-56032	N/A	Part Marking Specialists Inc.	N/A	PMS456123-466 Oct 15, 2019 Lot 64510 EXP 02/15/26

11. Functional Test Procedure Number	12. Acceptance Report Number
N/A	N/A

13. Comments:	N/A

B.5 FORM 3 - CHARACTERISTIC ACCOUNTABILITY, VERIFICATION, AND COMPATIBILITY EVALUATION

1. Part Number	2. Part Name	3. Serial Number	4. FAIR Number
LS1151268-011	GRAB HANDLE	N/A	VFP 000000

Characteristic Accountability				Inspection / Test Results			
5. Char No.:	6. Reference Location:	7. Characteristic Designator:	8. Requirement:	9. Results:	10. Designed / Qualified Tooling:	11. Nonconformance Number:	12. Additional Date / Comments:
1	S1 / H8	MINOR	1. DIMENSIONING AND TOLERANCING IN ACCORDANCE WITH ASME Y14-5M-1994	PASS	N/A	N/A	N/A
2	S1 / H8	MINOR	2. ASTM SI 10 APPLIES. ANNEX B SHALL BE USED IN CONVERTING AND ROUNDING OFF. 1 INCH = 25.4 mm APPLIES	PASS	N/A	N/A	N/A
3	S1 / H8	MINOR	3. UNLESS OTHERWISE SPECIFIED ALL WELDING TO BE PER AWS D1.2	PASS	N/A	N/A	N/A
4	S1 / G8	MINOR	4. MATERIAL SHALL BE FREE OF OIL, MACHINING FLUIDS, GREASE, OR OTHER CONTAMINANTS THAT MAY HAVE AN ADVERSE AFFECT ON WELDING.	PASS	N/A	N/A	N/A
5	S1 / G8	MINOR	5. REMOVE ALL BURRS AND SHARP EDGES.	PASS	N/A	N/A	N/A
6	S1 / G8	MINOR	6. PROTECTIVE FINISH: FINISH PER MIL-DTL-5541 TYPE II, CLASS 1A. PAINT PER REQUIREMNTS ON DRAWING NO. 19207-12344343, WHITE, COLOR NO. 17925 OF FED-STD-595. ALL HOLES TO BE FREE OF PAINT	PASS	N/A	N/A	C of C from special process supplier Form 4707 completed / reviewed

B.5 FORM 3 - CHARACTERISTIC ACCOUNTABILITY, VERIFICATION, AND COMPATIBILITY EVALUATION

1. Part Number	2. Part Name	3. Serial Number	4. FAIR Number
LS1151268-011	GRAB HANDLE	N/A	VFP 000000

Characteristic Accountability				Inspection / Test Results			
5. Char No.:	6. Reference Location:	7. Characteristic Designator:	8. Requirement:	9. Results:	10. Designed / Qualified Tooling:	11. Nonconformance Number:	12. Additional Date / Comments:
7	S1/ G8	MINOR	7. ITEM IDENTIFICATION: RUBBER STAMP OR STENCIL THE FOLLOWING MARKINGS IN ACCORDANCE WITH MIL-STD-130 USING BACK EPOXY INK PER A-A-56032, IN 4-7 mm HIGH CHARACTERS, 01417-LS1151268-011 MFR- MANFACTLRER'S CAGE CODE	6mm	CALIPERS ID X12S456 CAL DUE 11/10/26	N/A	01417-LS1151268-011 MFR XXXXX
7.1	S1 / C5	MINOR	NOTE 7 LOCATION	PASS	N/A	N/A	N/A
8	S1 / F8	MINOR	8. AFTER PROTECTIVE FINISH CUT A PIECE OF FN 3 TO APPROXIMAELY 400mm AND APPLY TO FN 1 IN OVERLAPPING WRAPS COVERING THE APPROXIMATE AREA SHOWN	PASS	N/A	N/A	N/A
8.1	S1 / C4	MINOR	NOTE 8 LOCATION	PASS	N/A	N/A	N/A
9	S1 / F8	MINOR	9. INSTALL FN 4 WITH THE SCREW HEAD ON THE TOPSIDE OF FN 2 WHERE SHOWN AND THEN INSTALL THE WASHER FINGER TIGHT FROM THE BACKSIDE OF FN 2 TO SECURE FOR SHIPMENT	PASS	N/A	N/A	N/A
9.1	S1 / E2	MINOR	NOTE 9 LOCATION	PASS	N/A	N/A	N/A

B.5 FORM 3 - CHARACTERISTIC ACCOUNTABILITY, VERIFICATION, AND COMPATIBILITY EVALUATION

1. Part Number	2. Part Name	3. Serial Number	4. FAIR Number
LS1151268-011	GRAB HANDLE	N/A	VFP 000000

Characteristic Accountability				Inspection / Test Results			
5. Char No.:	6. Reference Location:	7. Characteristic Designator:	8. Requirement:	9. Results:	10. Designed / Qualified Tooling:	11. Nonconformance Number:	12. Additional Date / Comments:
10	S1 / G5	MINOR	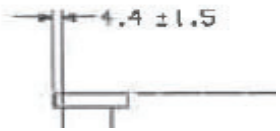	4.51	CALIPERS ID X12S456 CAL DUE 11/10/26	N/A	N/A
11	S1 / G3	MINOR	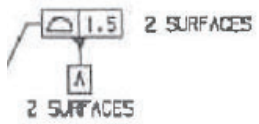	1.00- 1.02	CMM ID X1245588 CAL DUE 12/01/26	N/A	N/A
12	S1 / G2	MINOR	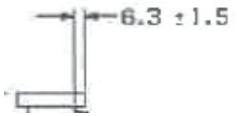	6.25	CALIPERS ID X12S456 CAL DUE 11/10/26	N/A	N/A
13	S1 / F2	MINOR	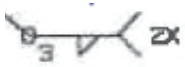	3	Fillet Gauge FG5642 CAL DUE 02/14/26	N/A	N/A
14	S1 / D2	MINOR		27.40-27.80	CALIPERS ID X12S456 CAL DUE 11/10/26	N/A	N/A
15	S1 / C2	MINOR		9.0-9.15	CALIPERS ID X12S456 CAL DUE 11/10/26	N/A	N/A
16	S1 / C2	MINOR	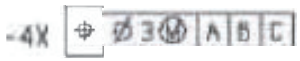	2.0-2.5	CMM ID X1245588 CAL DUE 12/01/26	N/A	N/A
17	S1 / C2	MINOR		.50-60	CMM ID X1245588 CAL DUE 12/01/26	N/A	N/A

DWG NO	SH	REV
LS1151268	1	-

REVISION HISTORY

REV	DESCRIPTION	DATE(YR-MO-DA)	APPROVED	
-	PRODUCT BASELINE	25-11-19	SW	DT

NOTES:

1. DIMENSIONING AND TOLERANCING IN ACCORDANCE WITH ASME Y14.5M-1994.
2. ASTM SI 10 APPLIES. ANNEX B SHALL BE USED IN CONVERTING AND ROUNDING OFF. 1 INCH = 25.4 mm APPLIES.
3. UNLESS OTHERWISE SPECIFIED ALL WELDING TO BE PER AWS D1.2.
4. MATERIAL SHALL BE FREE OF OIL, MACHINING FLUIDS, GREASE, OR OTHER CONTAMINANTS THAT MAY HAVE AN ADVERSE AFFECT ON WELDING
5. REMOVE ALL BURRS AND SHARP EDGES
6. PROTECTIVE FINISH:
   FINISH PER MIL-DTL-5541 TYPE II, CLASS 1A
   PAINT PER REQUIREMENTS ON DRAWING NO. 19207-12344343, WHITE, COLOR NO. 17925 OF FED-STD-595. ALL HOLES TO BE FREE OF PAINT
7. ITEM IDENTIFICATION:
   RUBBER STAMP OR STENCIL THE FOLLOWING MARKINGS IN ACCORDANCE WITH MIL-STD-130 USING BLACK EPOXY INK PER A-A-56032, IN 4-7 mm HIGH CHARECTORS
   01417-LS1151268-011
   MFR- MANUFACTURERS CAGE CODE
8. AFTER PROTECTIVE FINISH CUT A PIECE OF FN 3 TO APPROXIMATELY 400 mm AND APPLY TO FN 1 IN OVERLAPPING WRAPS COVERING THE APPROXIMATE AREA SHOWN
9. INSTALL FN 4 WITH THE SCREW HEAD ON THE TOPSIDE OF FN 2 WHERE SHOWN AND THEN INSTALL THE WASHER FINGER TIGHT FROM THE BACKSIDE OF FN 2 TO SECURE FOR SHIPMENT

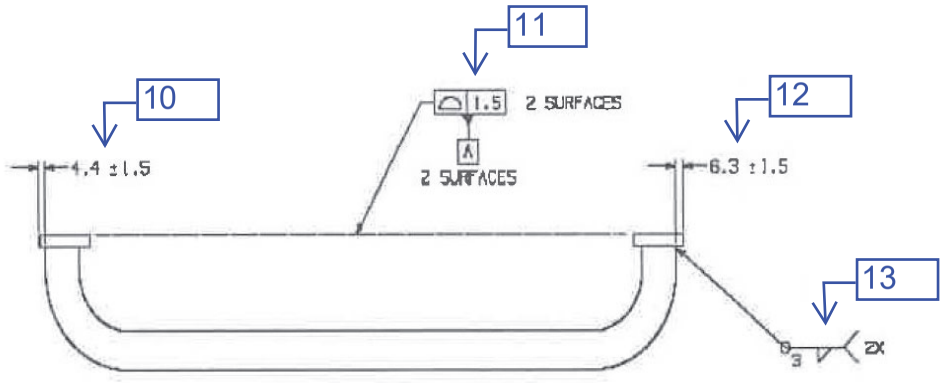

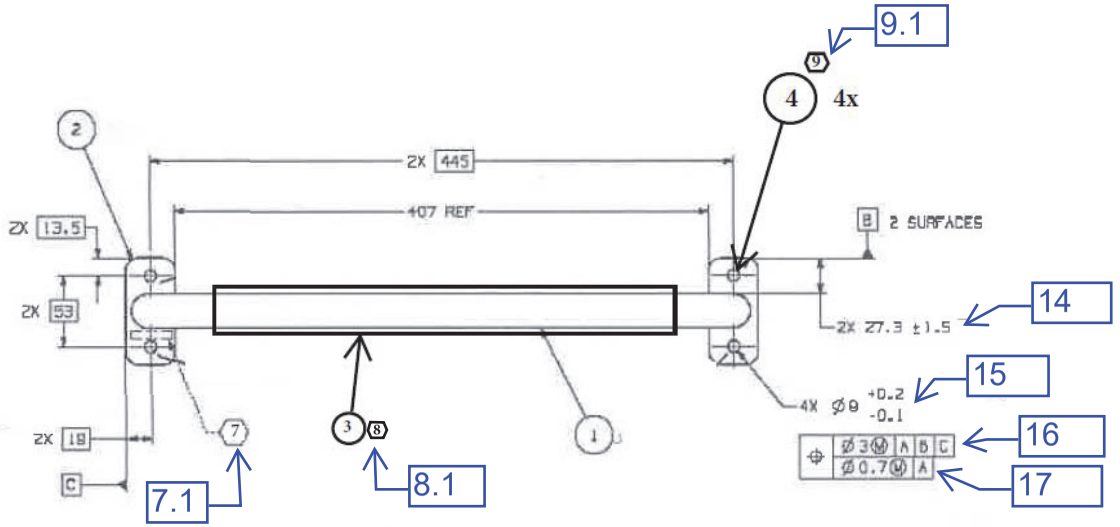

QTY REQD	FIND NO	CAGE CODE	PART NUMBER	DESCRIPTION	SPECIFICATION	NOTES
4	4	0002	2Y4X66Z	FASTNER KIT	XXXYYYX	SCREW AND WASHER KIT
1	3	0001	X2Y-14-002	ANTI-SLIP TAPE	XX.XX.XX.XX	80 GRIT, RUBBER ADHESIVE
2	2	56161	LS2223	PLATE	LS2223	ALUMINUM ALLOY
1	1	56161	LS2222	TUBE	LS2222	ALUMINUM ALLOY

PARTS LIST

NOTICE

THIS DRAWING AND/OR TECHNICAL INFORMATION IS THE PROPERTY OF GENERAL DYNAMICS LAND SYSTEMS-

INTERPRET DRAWING IAW ASME Y14.100 AND ASME Y14.5-2009

UNLESS OTHERWISE SPECIFIED TOLERANCES ARE:

LINEAR DIMENSIONS ± 1.5

ANGULAR DIMENSIONS ± 2°

REMOVE BURRS AND BREAK SHARP EDGES

METRIC

UNLESS OTHERWISE SPECIFIED DIMENSIONS ARE IN MILLIMETERS

PMIC: NA

THIRD ANGLE PROJECTION

MATL ENGRG	DRAWN BY	DATE (YY-MM-DD)
MFG ENGRG	CHECKER	DIMENSION MGMT
MFG WELD	ENGRG	ELEC ENGRG
WELD ENGRG	DRAWING APVD	DESIGN APVD

CONTRACT NUMBER

CONTRACTOR

PART NO LS1151268-011

GENERAL DYNAMICS Land Systems

TITLE GRAB HANDLE

SIZE	CAGE CODE	DWG NO	REV
E	56161	LS1151268	-

SCALE 1:1 WEIGHT SHEET 1 OF

THE SUPPORTING PACK SLIPS AND COCs FOR THIS LEVEL WOULD BE LOCATED HERE

B.1 Form 1 - Part Number Accountability

1. Part Number:	2. Part Name:	3. Serial Number:	4. FAIR Identifier:
LS2222	TUBE	N/A	VFP 000000
5. Part Revision Level:	***6. Drawing Number:***	***7. Drawing Revision Level:***	***8. Additional Changes:***
-	LS2222	-	N/A
9. Manufacturing Process Reference:	**10. Organization Name:**	11. Supplier Code:	12. Purchase Order No.:
WO 26549-1	Jos FAB LAB	1202555 / XXXXX	3335554441 REV 03
13. Detail Part FAI: ☑	**14. Full FAI:** ☑ **Partial FAI:** ☐		
	Baseline Part Number (including revision level):	LS2222 REV -	
Assembly FAI : ☐	**Reason for Full/Partial FAI:**	FIRST TIME MANUFACTURING	

a) If above part number is a detail part only, go to Field 19.
b) If above part number is an assembly, go to the "INDEX" section below.

INDEX of part numbers or sub-assembly numbers required to make the assembly noted above.

15. Part Number:	*16. Part Name:*	*17. Part Type:*	*18. FAIR Identifier:*
N/A	N/A	N/A	N/A

19. Does FAIR Contain a Documented Nonconformance(s)? YES ☐ **NO** ☑

20.FAIR Verified By:	Sam Smith	{INSERT STAMP HERE IF APPLICABLE}	**21. Date:**	08/14/2026
22.FAIR Reviewed By:	Jo Fabman	{INSERT STAMP HERE IF APPLICABLE}	**23. Date:**	08/14/2026
24.Customer Approval:	Deanna Totten	017	***25. Date:***	08/14/2026

26. Comments:	QY11, QJ21, QX118, QL46

QX118- Approval Date 10/25/2025

B.3 FORM 2 - PRODUCT ACCOUNTABILITY - MATERIALS, SPECIAL PROCESSES, AND FUNCTIONAL TESTING

1. Part Number:	2. Part Name:	3. Serial Number:	4. FAI Identifier:
LS2222	TUBE	N/A	VFP 000000

5. Material or Process Name	6. Specification Number	7. Code	8. Supplier	9. Customer Approval Verification	10. Certificate of Conformance Number
MATERIAL: Tubing Aluminum Alloy 6061-T6 or 6061-T6511 25.4mm OD x 2.18mm or 1.0 OD x .12" Wall	ASTM B210 or ASTM B221	N/A	Tom's Aluminum	N/A	TA4651-025 June 24, 2018 - Heat/Lot 354-62418

11. Functional Test Procedure Number	12. Acceptance Report Number
N/A	N/A

13. Comments:	N/A

B.5 FORM 3 - CHARACTERISTIC ACCOUNTABILITY, VERIFICATION, AND COMPATIBILITY EVALUATION

1. Part Number	2. Part Name	3. Serial Number	4. FAIR Number
LS2222	TUBE	N/A	VFP 000000

Characteristic Accountability				Inspection / Test Results			
5. Char No.:	6. Reference Location:	7. Characteristic Designator:	8. Requirement:	9. Results:	10. Designed / Qualified Tooling:	11. Nonconformance Number:	12. Additional Date / Comments:
1	S1 / H8	MINOR	1. MATERIAL: TUBING, ALUMINUM ALLOY 6061-T6 OR 6061-T6511, SPEC. ASTM B210 OR ASTM B221. DIA 25.4mm OD X 3.18mm WALL THICKNESS (11.0 DIA X .12 INCH WALL THICKNESS)	11.0 DIA X .12 INCH	CALIPERS ID X12S456 CAL DUE 11/10/26	N/A	N/A
2	S1 / H8	MINOR	2. DIMENSIONING AND TOLERANCING IN ACCORDANCE WITH ASME Y14.5M-1994	PASS	N/A	N/A	N/A
3	S1 / G8	MINOR	3. ASTM SI 10 APPLIES. ANNEX B SHAML BE USED IN CONVERTING AND ROUNDING OFF. 1 INCH = 25.4 mm APPLIES.	PASS	N/A	N/A	N/A
4	S1 / G8	MINOR	4. MATERIAL SHALL BE FREE OF OIL, MACHINING FLUIDS, GREASE, OR OTHER CONTAMINANTS THAT MAY HAVE AN ADVERSE AFFECT ON WELDING.	PASS	N/A	N/A	N/A
5	S1 / G8	MINOR	5. REMOVE ALL BURRS AND SHARP EDGES.	PASS	N/A	N/A	N/A
6	S1 / C6	MINOR		25.32-25.54	CALIPERS ID X12S456 CAL DUE 11/10/26	N/A	N/A
7	S1 / E4	MINOR		448.24	CMM ID X1245588 CAL DUE 12/01/26	N/A	N/A

B.5 FORM 3 - CHARACTERISTIC ACCOUNTABILITY, VERIFICATION, AND COMPATIBILITY EVALUATION

Sheet: _____ of _____

1. Part Number	2. Part Name	3. Serial Number	4. FAIR Number
LS2222	TUBE	N/A	VFP 000000

Characteristic Accountability				Inspection / Test Results			
5. Char No.:	***6. Reference Location:***	***7. Characteristic Designator:***	**8. Requirement:**	**9. Results:**	***10. Designed / Qualified Tooling:***	***11. Nonconformance Number:***	12. Additional Date / Comments:
8	S1 / C6	MINOR	2x ⌀67.3 ±1.5	37.51-37.60	RADIUS GAGE ID X1245866 CAL DUE 10/31/26	N/A	N/A
9	S1 / D3	MINOR	2X 54.7 ±2	54.70-54.92	CALIPERS ID X12S456 CAL DUE 11/10/26	N/A	N/A
10	S1 / C1	MINOR	2X 67.4 LINEAR DIMENSIONS ± .5	67.45- 67.21	CALIPERS ID X12S456 CAL DUE 11/10/26	N/A	N/A

B.5 FORM 3 - CHARACTERISTIC ACCOUNTABILITY, VERIFICATION, AND COMPATIBILITY EVALUATION

1. Part Number	2. Part Name	3. Serial Number	4. FAIR Number
LS2222	TUBE	N/A	VFP 000000

Characteristic Accountability				Inspection / Test Results			
5. Char No.:	6. Reference Location:	7. Characteristic Designator:	8. Requirement:	9. Results:	10. Designed / Qualified Tooling:	11. Nonconformance Number:	12. Additional Date / Comments:
8	S1 / C6	MINOR	2x ⌀37.3 ±1.5	37.51-37.60	RADIUS GAGE ID X1245866 CAL DUE 10/31/26	N/A	N/A
9	S1 / D3	MINOR	2X 54.7 ±2	54.70-54.92	CALIPERS ID X12S456 CAL DUE 11/10/26	N/A	N/A
10	S1 / C1	MINOR	2X 67.4 LINEAR DIMENSIONS ± .5	67.45- 67.21	CALIPERS ID X12S456 CAL DUE 11/10/26	N/A	N/A

DWG NO	SH	REV
LS2222	1	-

REVISION HISTORY

REV	DESCRIPTION	DATE(YR-MO-DA)	APPROVED
-	PRODUCT BASELINE	25-11-19	SW DT

NOTES:

1. MATERIAL:
   TUBING, ALUMINUM ALLOY 6061-T6 OR 6061-T6511, SPEC. ASTM B210 OR ASTM B221. DIA 25.4mm OD X 3.18mm WALL THICKNESS (11.0 DIA X .12 INCH WALL THICKNESS)
2. DIMENSIONING AND TOLERANCING IN ACCORDANCE WITH ASME Y14.5M-1994
3. ASTM SI 10 APPLIES. ANNEX B SHALL BE USED IN CONVERTING AND ROUNDING OFF. 1 INCH = 25.4 mm APPLIES
4. MATERIAL SHALL BE FREE OF OIL, MACHINING FLUIDS, GREASE, OR OTHER CONTAMINANTS
5. REMOVE ALL BURRS AND SHARP EDGES

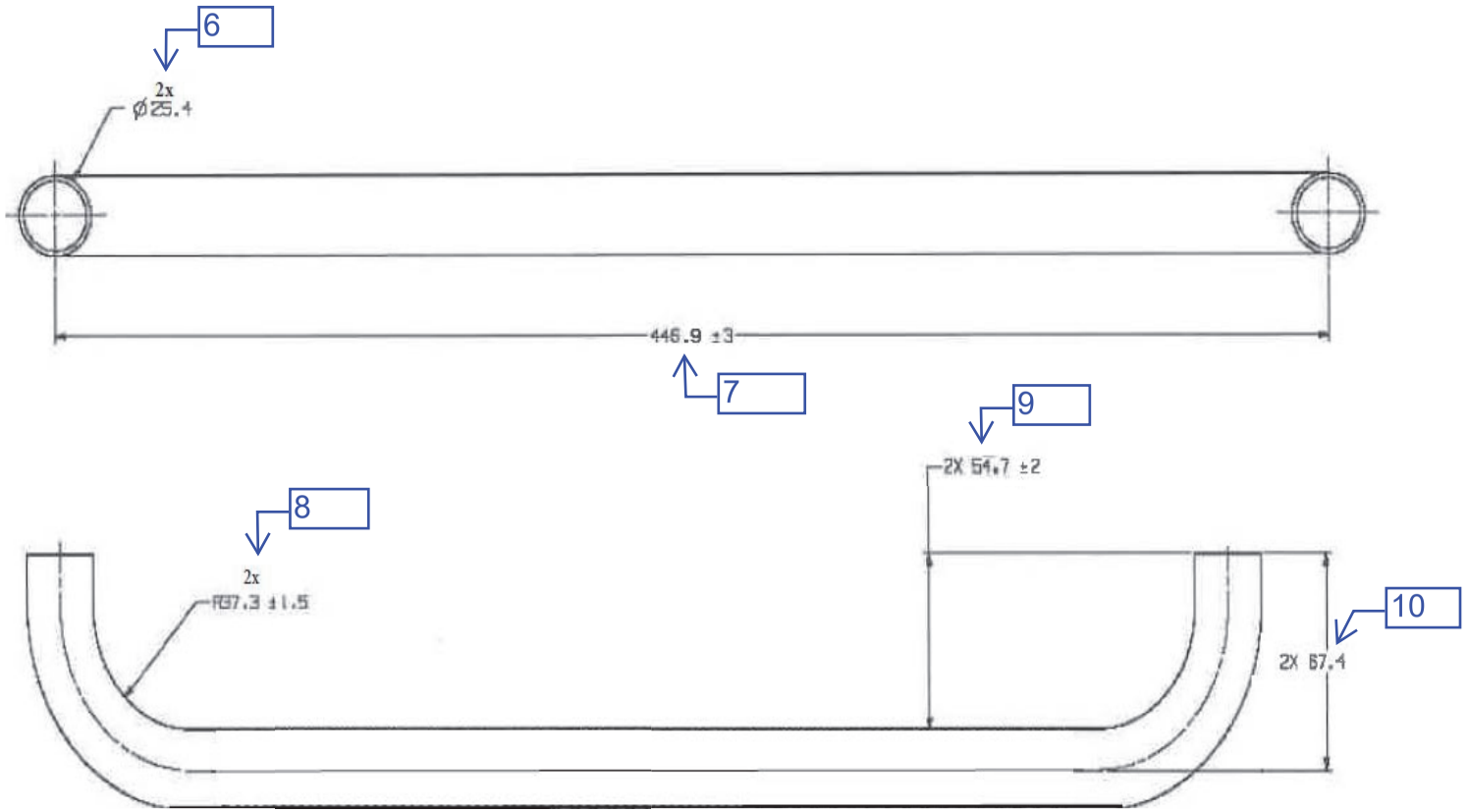

NOTICE

THIS DRAWING AND/OR TECHNICAL INFORMATION IS THE PROPERTY OF GENERAL DYNAMICS LAND SYSTEMS-

INTERPRET DRAWING IAW ASME Y14.100 AND ASME Y14.5-2009

UNLESS OTHERWISE SPECIFIED TOLERANCES ARE:

LINEAR DIMENSIONS ± .5

ANGULAR DIMENSIONS ± 2°

REMOVE BURRS AND BREAK SHARP EDGES

METRIC

UNLESS OTHERWISE SPECIFIED DIMENSIONS ARE IN MILLIMETERS

PMIC: NA

THIRD ANGLE PROJECTION

CONTRACT NUMBER –

CONTRACTOR –

MATL ENGRG	DRAWN BY	DATE (YY-MM-DD)
–	–	–
MFG ENGRG	CHECKER	DIMENSION MGMT
–	–	–
MFG WELD	ENGRG	ELEC ENGRG
–	–	–
WELD ENGRG	DRAWING APVD	DESIGN APVD
–	–	–

PART NO LS2222

GENERAL DYNAMICS
Land Systems

TITLE

TUBE

SIZE	CAGE CODE	DWG NO	REV
E	56161	LS2222	-

SCALE 1:1 WEIGHT SHEET 1 OF 1

THE SUPPORTING PACK SLIPS AND COCs FOR THIS LEVEL WOULD BE LOCATED HERE

AS9102C

B.1 Form 1 - Part Number Accountability

Sheet: 1 of 4

1. Part Number:	2. Part Name:	3. Serial Number:	4. FAIR Identifier:
LS2223	PLATE	N/A	VFP 000000
5. Part Revision Level:	**6. Drawing Number:**	**7. Drawing Revision Level:**	**8. Additional Changes:**
-	LS2223	-	N/A
9. Manufacturing Process Reference:	**10. Organization Name:**	11. Supplier Code:	12. Purchase Order No.:
WO 26549-2	JOs FAB LAB	1202555 / XXXXX	3335554441 REV 03

13. Detail Part FAI: ☑ **14. Full FAI:** ☑ **Partial FAI:** ☐

Baseline Part Number (including revision level): LS2223 REV -

Assembly FAI : ☐ **Reason for Full/Partial FAI:** FIRST TIME MANUFACTURING

a) If above part number is a detail part only, go to Field 19.
b) If above part number is an assembly, go to the "INDEX" section below.

INDEX of part numbers or sub-assembly numbers required to make the assembly noted above.

15. Part Number:	16. Part Name:	17. Part Type:	18. FAIR Identifier:
N/A	N/A	N/A	N/A

19. Does FAIR Contain a Documented Nonconformance(s)? YES ☐ **NO** ☑

20.FAIR Verified By:	Sam Smith	{INSERT STAMP HERE IF APPLICABLE}	**21. Date:**	08/14/2026
22.FAIR Reviewed By:	Jo Fabman	{INSERT STAMP HERE IF APPLICABLE}	**23. Date:**	08/14/2026
24.Customer Approval:	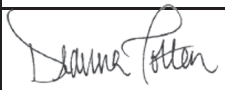		***25. Date:***	08/14/2026

26. Comments: QY11, QJ21, QX118, QL46

QX118- Approval Date 10/25/2025

B.3 FORM 2 - PRODUCT ACCOUNTABILITY - MATERIALS, SPECIAL PROCESSES, AND FUNCTIONAL TESTING

1. Part Number:	2. Part Name:	3. Serial Number:	4. FAI Identifier:
LS2223	PLATE	N/A	VFP 000000

5. Material or Process Name	6. Specification Number	7. Code	8. Supplier	9. Customer Approval Verification	10. Certificate of Conformance Number
MATERIAL: Aluminum Alloy 6061-T651 or T6511 7.94mm or 1.312 Inch Thick	ASTM B209 or ASTM B221	N/A	Tom's Aluminum	N/A	TA4660-056 Feb 23, 2019 - Heat/Lot 365-22319

11. Functional Test Procedure Number	12. Acceptance Report Number
N/A	N/A

13. Comments:	N/A

B.5 FORM 3 - CHARACTERISTIC ACCOUNTABILITY, VERIFICATION, AND COMPATIBILITY EVALUATION

1. Part Number	2. Part Name	3. Serial Number	4. FAIR Number
LS2223	PLATE	N/A	VFP 000000

Characteristic Accountability				Inspection / Test Results			
5. Char No.:	6. Reference Location:	7. Characteristic Designator:	8. Requirement:	9. Results:	10. Designed / Qualified Tooling:	11. Nonconformance Number:	12. Additional Date / Comments:
1	S1 / H8	MINOR	1. MATERIAL: Aluminum Alloy, 6061-T651 or T6511, ASTM B209 OR ASTM B221 7.94mm or 1.312 Inch Thick	1.312 Inch	CALIPERS ID X12S456 CAL DUE 11/10/26	N/A	N/A
2	S1 / G8	MINOR	2. DIMENSIONING AND TOLERANCING IN ACCORDANCE WITH ASME Y14.5M-1994	Pass	N/A	N/A	N/A
3	S1 / G8	MINOR	3. ASTM SI 10 APPLIES. ANNEX B SHAML BE USED IN CONVERTING AND ROUNDING OFF. 1 INCH = 25.4 mm APPLIES.	Pass	N/A	N/A	N/A
4	S1 / G8	MINOR	4. MATERIAL SHALL BE FREE OF OIL, MACHINING FLUIDS, GREASE, OR OTHER CONTAMINANTS THAT MAY HAVE AN ADVERSE AFFECT ON WELDING.	Pass	N/A	N/A	N/A
5	S1 / G8	MINOR	5. REMOVE ALL BURRS AND SHARP EDGES.	Pass	N/A	N/A	N/A
6	S1 / F6	MINOR		10.01-10.06	RADIUS GAGE ID X1245866 CAL DUE 10/31/26	N/A	N/A

AS9102C

B.5 FORM 3 - CHARACTERISTIC ACCOUNTABILITY, VERIFICATION, AND COMPATIBILITY EVALUATION

Sheet: of

1. Part Number	2. Part Name	3. Serial Number	4. FAIR Number
LS2223	PLATE	N/A	VFP 000000

Characteristic Accountability				Inspection / Test Results			
5. Char No.:	6. Reference Location:	7. Characteristic Designator:	8. Requirement:	9. Results:	10. Designed / Qualified Tooling:	11. Nonconformance Number:	12. Additional Date / Comments:
7	S1 / D6	MINOR		1.29	CMM ID X1245588 CAL DUE 12/01/26	N/A	N/A
8	S1 / C5	MINOR		80.64	CALIPERS ID X12S456 CAL DUE 11/10/26	N/A	N/A
9	S1 / E2	MINOR		38.02	CALIPERS ID X12S456 CAL DUE 11/10/26	N/A	N/A

B.5 FORM 3 - CHARACTERISTIC ACCOUNTABILITY, VERIFICATION, AND COMPATIBILITY EVALUATION

1. Part Number	2. Part Name	3. Serial Number	4. FAIR Number
LS2223	PLATE	N/A	VFP 000000

Characteristic Accountability				Inspection / Test Results			
5. Char No.:	6. Reference Location:	7. Characteristic Designator:	8. Requirement:	9. Results:	10. Designed / Qualified Tooling:	11. Nonconformance Number:	12. Additional Date / Comments:
7	S1 / D6	MINOR		1.29	CMM ID X1245588 CAL DUE 12/01/26	N/A	N/A
8	S1 / C5	MINOR		80.64	CALIPERS ID X12S456 CAL DUE 11/10/26	N/A	N/A
9	S1 / E2	MINOR		38.02	CALIPERS ID X12S456 CAL DUE 11/10/26	N/A	N/A

DWG NO	SH	REV
LS2223	1	-

REVISION HISTORY

REV	DESCRIPTION	DATE(YR-MO-DA)	APPROVED
-	PRODUCT BASELINE	23-11-19	SW DT

NOTES:

1. MATERIAL:
   ALUMINUM ALLOY, 6061-T651 OR T6511, ASTM B209 OR ASTM B221
   7.94mm (.312 INCH) THICK
2. DIMENSIONING AND TOLERANCING IN ACCORDANCE WITH ASME Y14.5M-1994
3. ASTM SI 10 APPLIES. ANNEX B SHALL BE USED IN CONVERTING AND ROUNDING OFF.
   1 INCH = 25.4 mm APPLIES
4. MATERIAL SHALL BE FREE OF OIL, MACHINING FLUIDS, GREASE OR OTHER CONTAMINANTS
5. REMOVE ALL BURRS AND SHARP EDGES

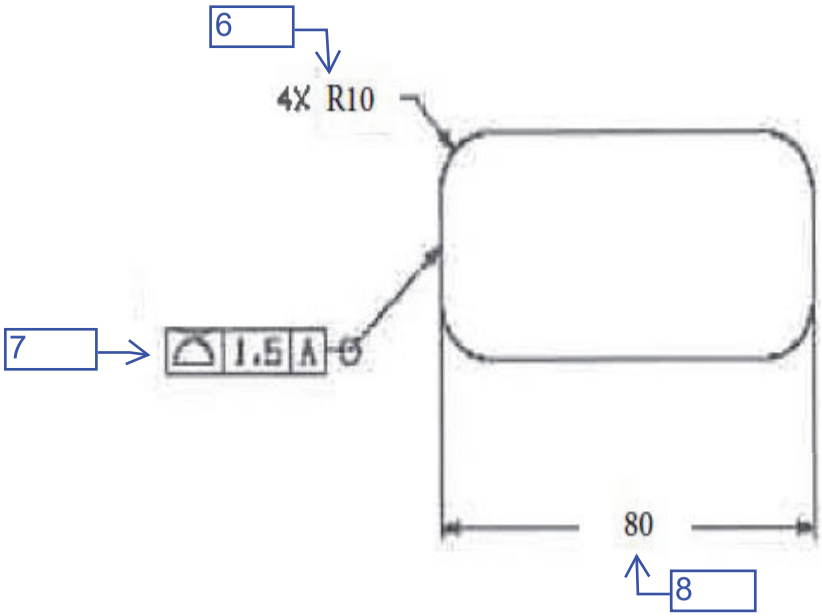

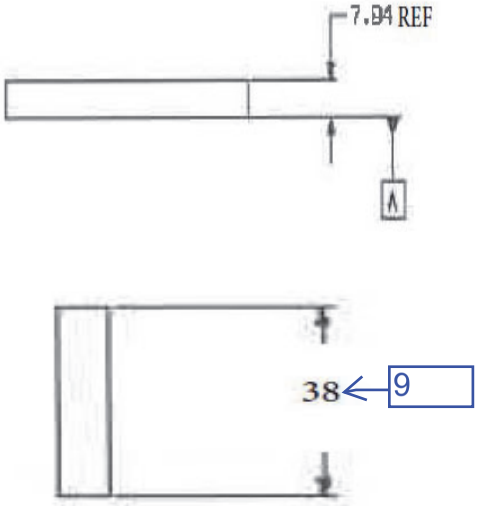

NOTICE

THIS DRAWING AND/OR TECHNICAL INFORMATION IS THE PROPERTY OF GENERAL DYNAMICS LAND SYSTEMS-

INTERPRET DRAWING IAW ASME Y14.100 AND ASME Y14.5-2009

UNLESS OTHERWISE SPECIFIED TOLERANCES ARE:

LINEAR DIMENSIONS ± 1.5

ANGULAR DIMENSIONS ± 2°

REMOVE BURRS AND BREAK SHARP EDGES

METRIC

UNLESS OTHERWISE SPECIFIED DIMENSIONS ARE IN MILLIMETERS

PMIC: NA

THIRD ANGLE PROJECTION

CONTRACT NUMBER –

CONTRACTOR –

MATL ENGRG	DRAWN BY	DATE (YY-MM-DD)
–	–	–
MFG ENGRG	CHECKER	DIMENSION MGMT
–	–	–
MFG WELD	ENGRG	ELEC ENGRG
–	–	–
WELD ENGRG	DRAWING APVD	DESIGN APVD
–	–	–

PART NO LS2223

GENERAL DYNAMICS
Land Systems

TITLE PLATE

SIZE	CAGE CODE	DWG NO	REV
E	56161	LS2223	-

SCALE 1:1 WEIGHT SHEET 1 OF 1

THE SUPPORTING PACK SLIPS AND COCs FOR THIS LEVEL WOULD BE LOCATED HERE